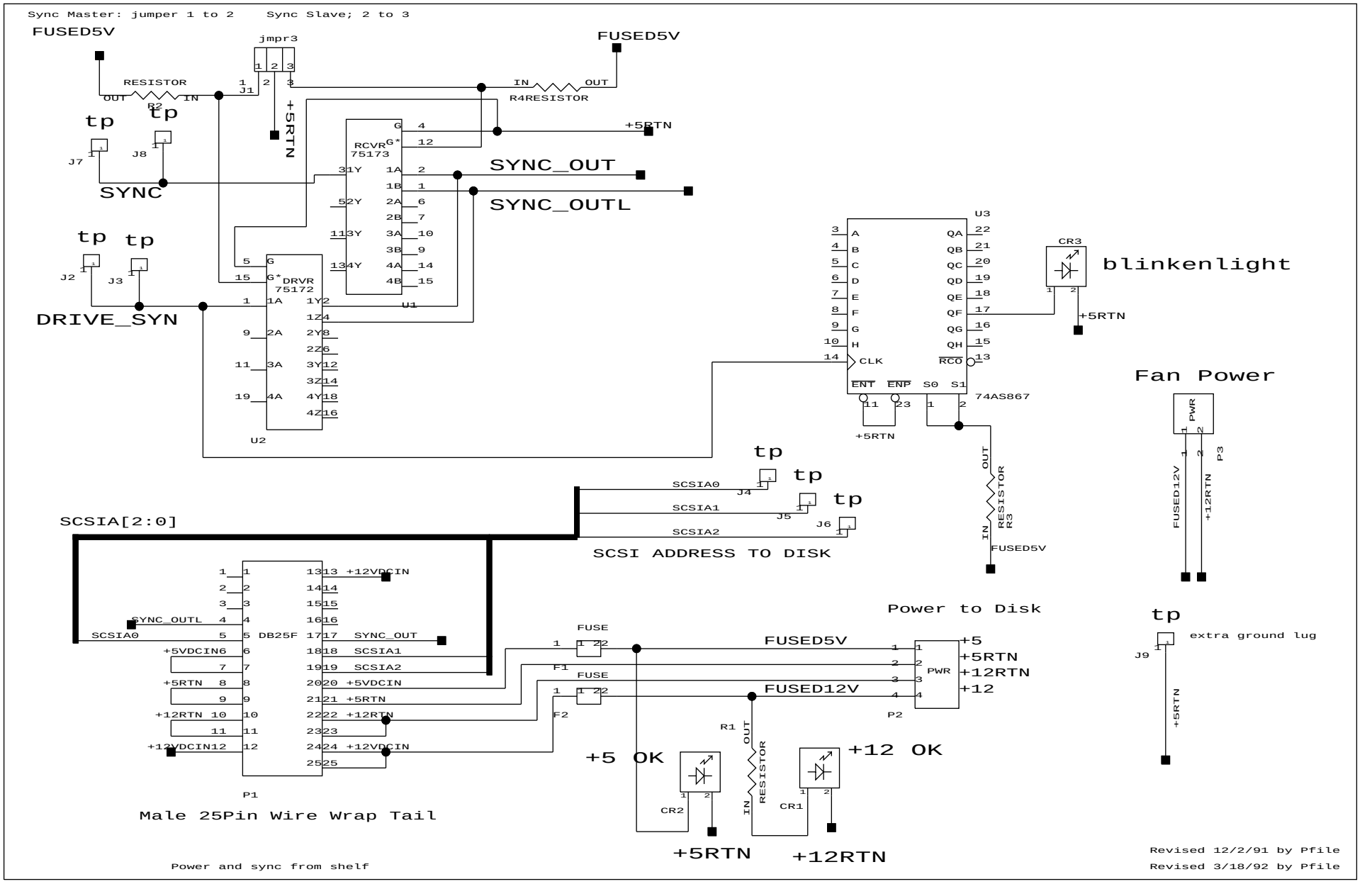
Sync Master: jumper 1 to 2
Sync Slave; 2 to 3
FUSED5V
jmpr3
RESISTOR
OUT
IN
R2
J1
+5RTN
FUSED5V
IN
OUT
R4RESISTOR
tp
tp
J7
J8
SYNC
RCVR
75173
+5RTN
SYNC_OUT
SYNC_OUTL
tp
tp
J2
J3
DRIVE_SYN
DRVR
75172
U1
U2
U3
74AS867
CR3
blinkenlight
+5RTN
Fan Power
PWR
P3
FUSED12V
+12RTN
CLK
ENT
ENP
S0
S1
RCO
+5RTN
OUT
RESISTOR
R3
IN
FUSED5V
tp
tp
tp
SCSIA0
SCSIA1
SCSIA2
J4
J5
J6
SCSI ADDRESS TO DISK
SCSIA[2:0]
+12VDCIN
SYNC_OUTL
SCSIA0
SYNC_OUT
SCSIA1
SCSIA2
+5VDCIN6
+5VDCIN
+5RTN
+5RTN
+12RTN
+12RTN
+12VDCIN12
+12VDCIN
DB25F
P1
Male 25Pin Wire Wrap Tail
FUSE
F1
FUSE
F2
FUSED5V
FUSED12V
Power to Disk
PWR
P2
+5
+5RTN
+12RTN
+12
R1
OUT
RESISTOR
IN
+5 OK
+12 OK
CR2
CR1
+5RTN
+12RTN
tp
J9
extra ground lug
+5RTN
Power and sync from shelf
Revised 12/2/91 by Pfile
Revised 3/18/92 by Pfile