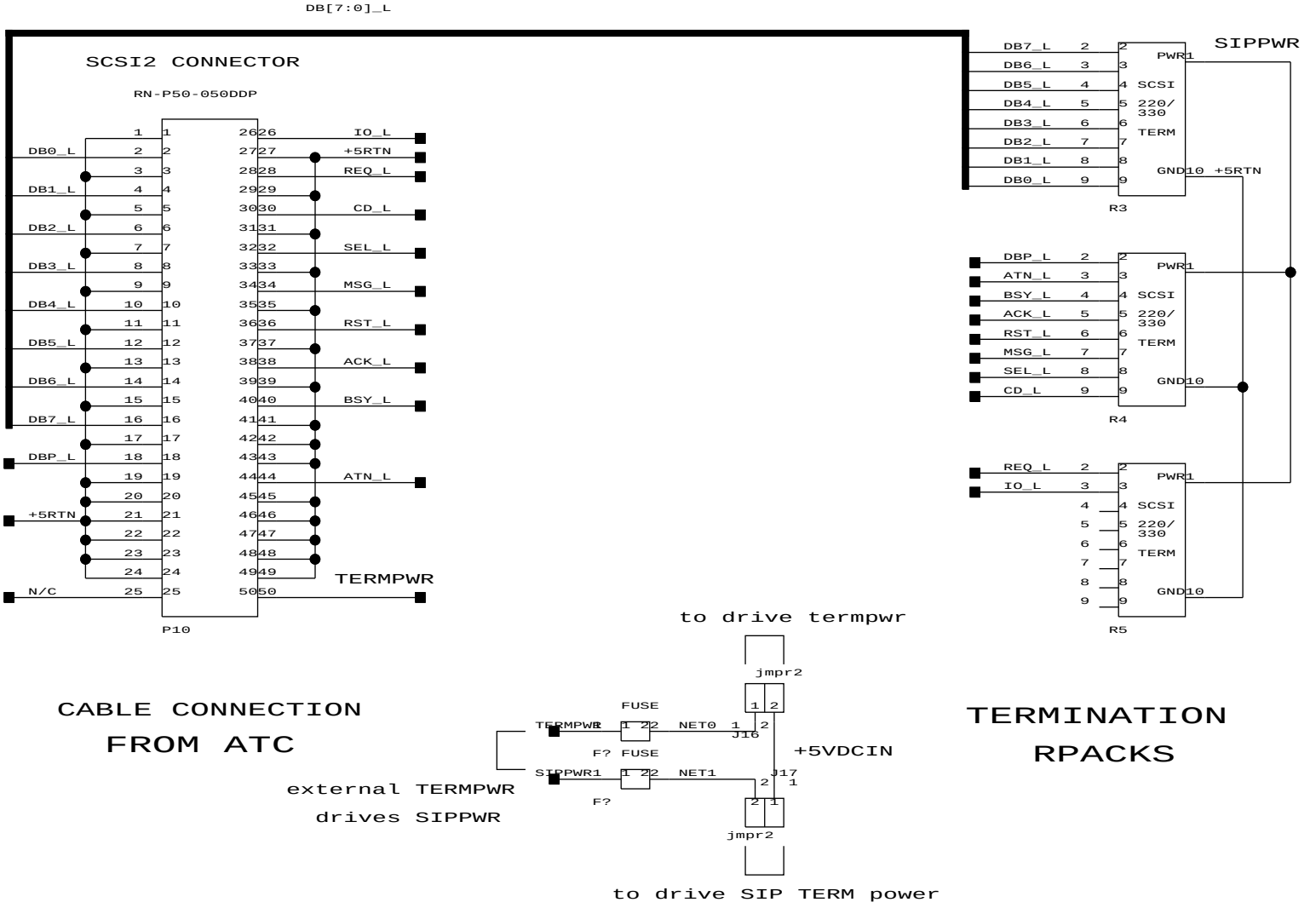

Revised 12/2/91 by pfile